Art.-Number: 701109

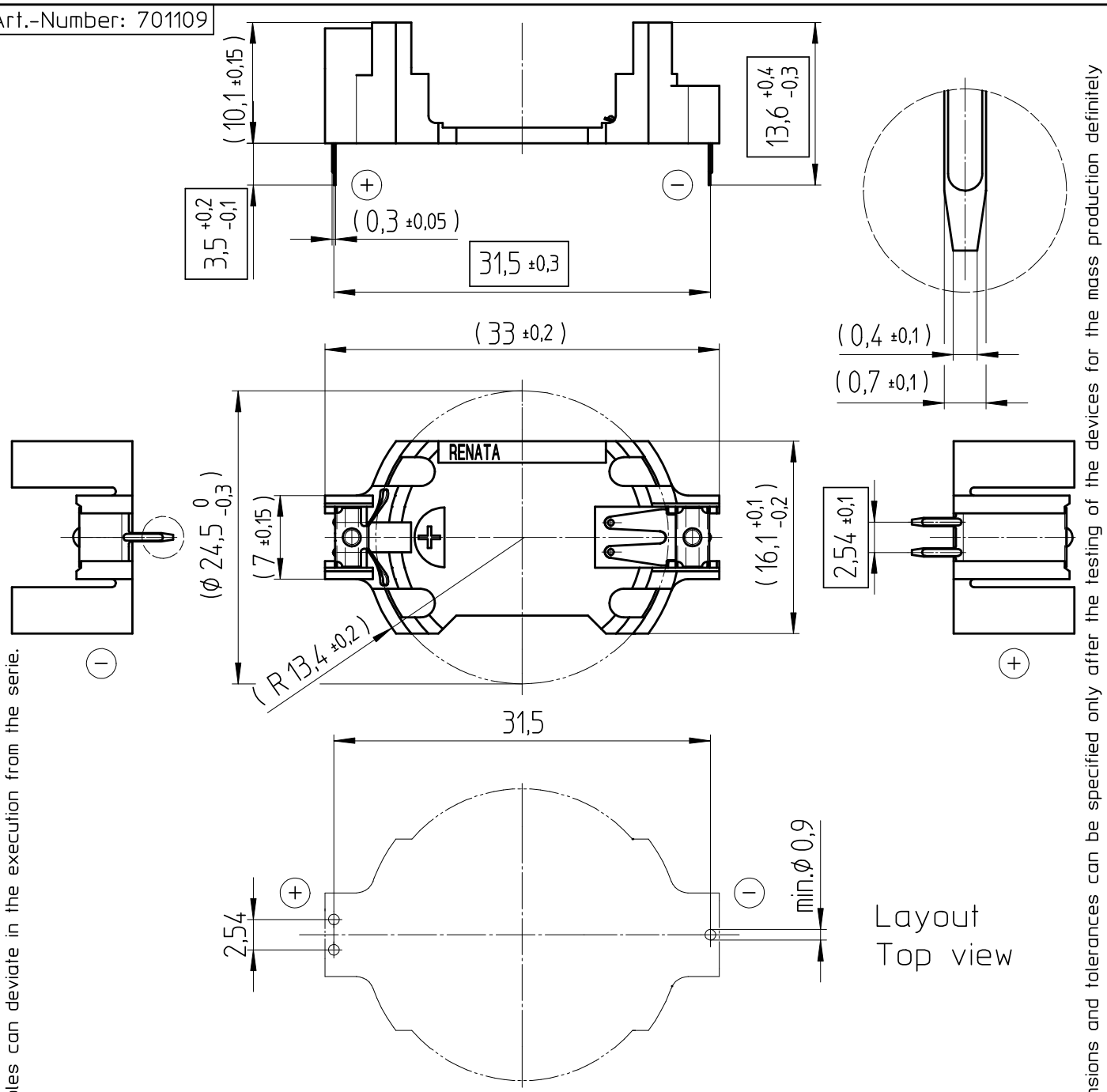

- Samples can deviate in the execution from the serie.

- Dimensions and tolerances can be specified only after the testing of the devices for the mass production definitely

Holder material : heat resistant, glass-fiber reinforced LCP

Battery contacts : spring stainless steel 301 nickel plated, thickness 10µm

Solder contacts : spring stainless steel 301 solder plated throughout 100% Sn, thickness 10µm

All framed values will be used for dimension checking !

Rev.	1	10.09.07	MCi	Rev.					Customer's Approval		
Rev.	2	02.11.07	SRi	Rev.					Date		
Rev.				Rev.					Signature		
Titel: HU2477N-LF								Scale 2:1	Drawn	21.01.05	SRi
									Checked	02.11.07	BBö
									Approved	02.11.07	MHo

renata batteries

CH-4452 Itingen
Switzerland

3.8754.4-2