A3

IDEAS - PLAN REALISE A PARTIR D'UN MODELE 3D
NE PEUT ETRE MIS A JOUR QUE SUR CAO

N CLIENT

N OUTIL

N D'ETUDE

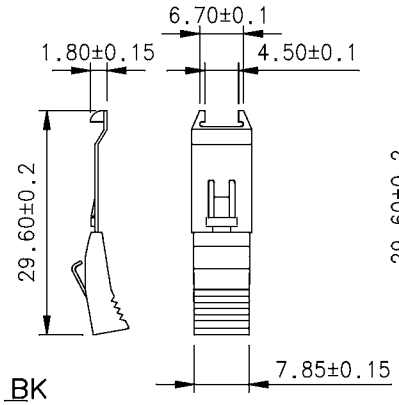

SS: Flag Hooks

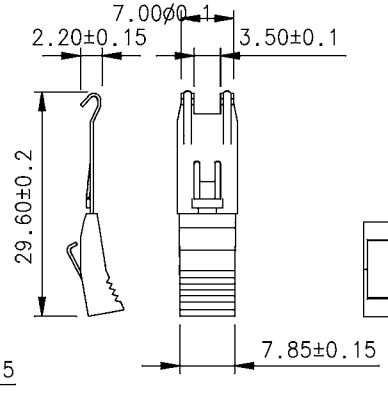

LS: Fish Hooks

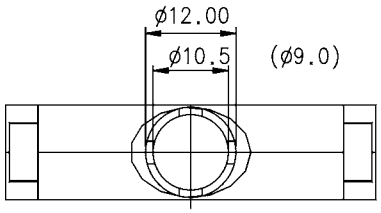

MD5 PL 50 S90 D BK

SERIES

plastic hood
with inner shell

SIZE

Entry and hole size :
S90 : straight entry dia. 9,00 (std)
S10 : straight entry dia. 10,00

Spring latches :
C : fish hook
D : flag hook

COLOUR
BK : black
IV : ivory
LG : light grey
DG : dark grey
GR : green
YE : yellow

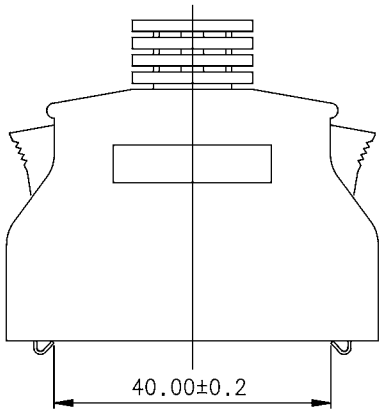

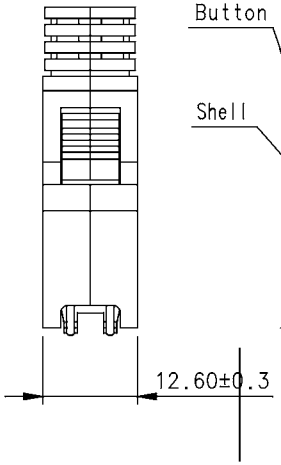

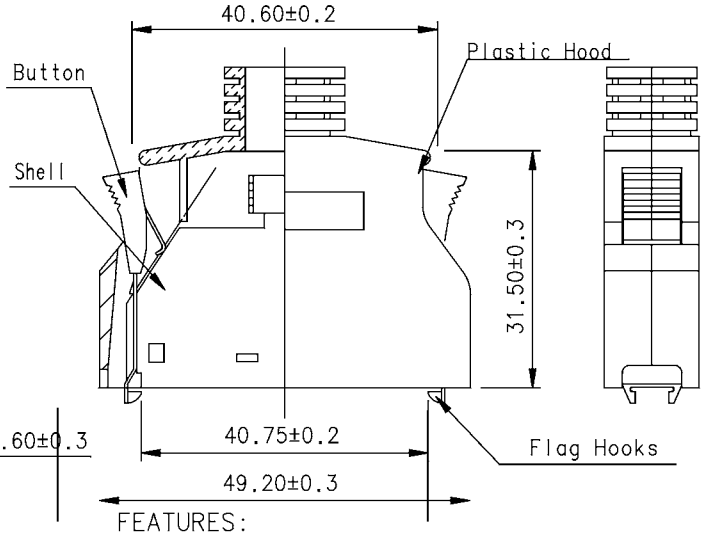

FEATURES:
- Plastic hood with spring latches
- Steel inner shell
- Full EMI/RFI shielded

MATERIALS:
- Hood: Plastic ABS PA-769
- Inner Shell: Steel , Nickel plated
- Latch: Phosphor bronze , Nickel plated
- Latch: Stainless steel

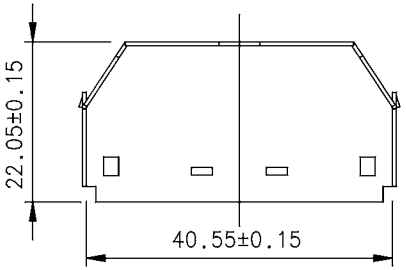

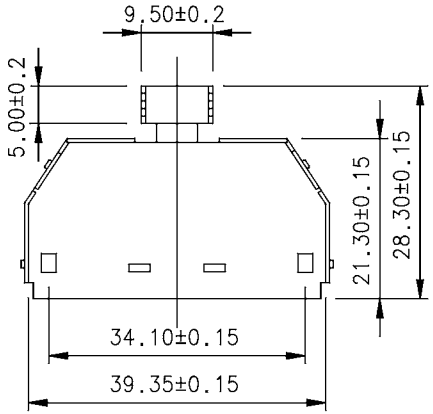

Amphenol Socapex Usine de Dole		TOL. GEN.							
		VOLUME PIECE							
		SURFACE PIECE							
		PROTECTION							
ECH. 1.5	ENS.	TRAITEMENT							
N SERIE		MATIERE	A	CREATION PLAN	ATO	30/05 2005	ATO	A	
	DOSSIER		CLIENT	MODIFICATIONS	EXEC.	DATE	Approb	IND.	
DATE DU TIRAGE	DESIGNATION	MINI D SERIES	N INTERNE	MD5 PL 50					

COMMUNICATION ET UTILISATION INTERDITES SAUF AUTORISATION