Shielded cable terminals, type *SKN*

selos

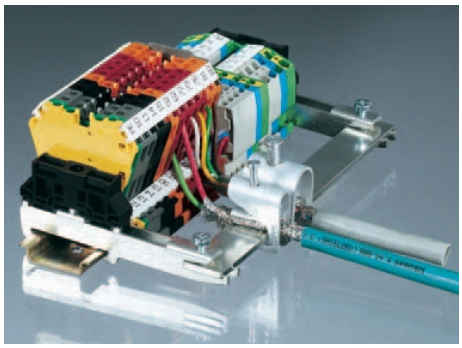

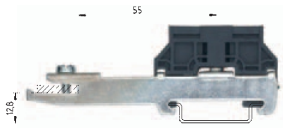

WE SH 1

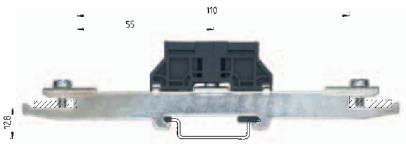

WE SH 2

Material: nickel-plated brass

SKN...

Type (shielded cable diameter)	Clamping	B	L	H_{max}
SKN1.5-6.5	8-13 N	10 mm	25 mm	33.5 mm
SKN5-11	22-31 N	17 mm	25 mm	41 mm
SKN10-17	32-58 N	23 mm	25 mm	57 mm
SKN16-24	37-53 N	30 mm	25 mm	71 mm

	Type	Part No.	Std. Pack	Type	Part No.	Std. Pack
Shielded cable terminals	SKN1,5-6,5	Z2.803.1328.0	10			
	SKN5-11	Z2.803.1428.0	10			
	SKN10-17	Z2.803.1528.0	10			
	SKN16-24	Z2.803.1628.0	10			
Accessories						
1. Busbar support (one-sided), tin-plated steel				WE SH 1/35	Z5.515.3310.0	20
Busbar support (two-sided), tin-plated steel				WE SH 2/35	Z5.515.3410.0	20
Busbar support, plastic black						
2. Ground terminal, tin-plated steel green-yellow						
3. Busbar, Cu tin-plated 18x3 mm L = 1 m						

Subject to change without further notice

Shielded cable terminals, type *SKN*

selos

WE SH3

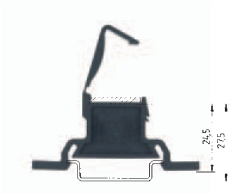

SKN SH/35

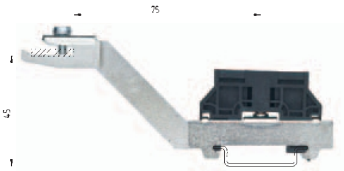

WE SH4

WAK 35/4

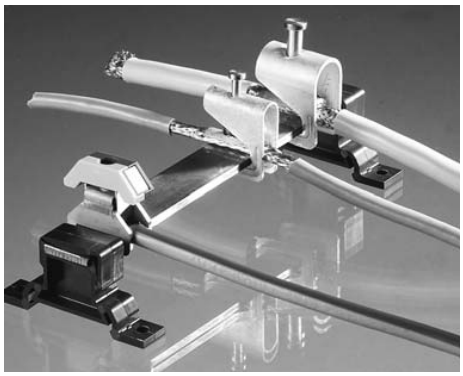

Type	Part No.	Std. Pack	Type	Part No.	Std. Pack
WESH3/35	Z5.519.0310.0	25			
WESH4/35	Z5.519.0410.0	25			
			SKNSH/35/F	Z1.980.0153.0	10
			WAK35/4GN	30.494.4210.7	10
			18 x 3MSN	98.291.1000.0	10