THIS DRAWING IS UNPUBLISHED. RELEASED FOR PUBLICATION -,- .
© COPYRIGHT - BY TYCO ELECTRONICS CORPORATION. ALL RIGHTS RESERVED.

LOC	DIST
AF	50

REVISIONS

P	LTR	DESCRIPTION	DATE	DWN	APVD
	P	REVISED PER 0G3A-0548-04	20JUL04	JR	GP

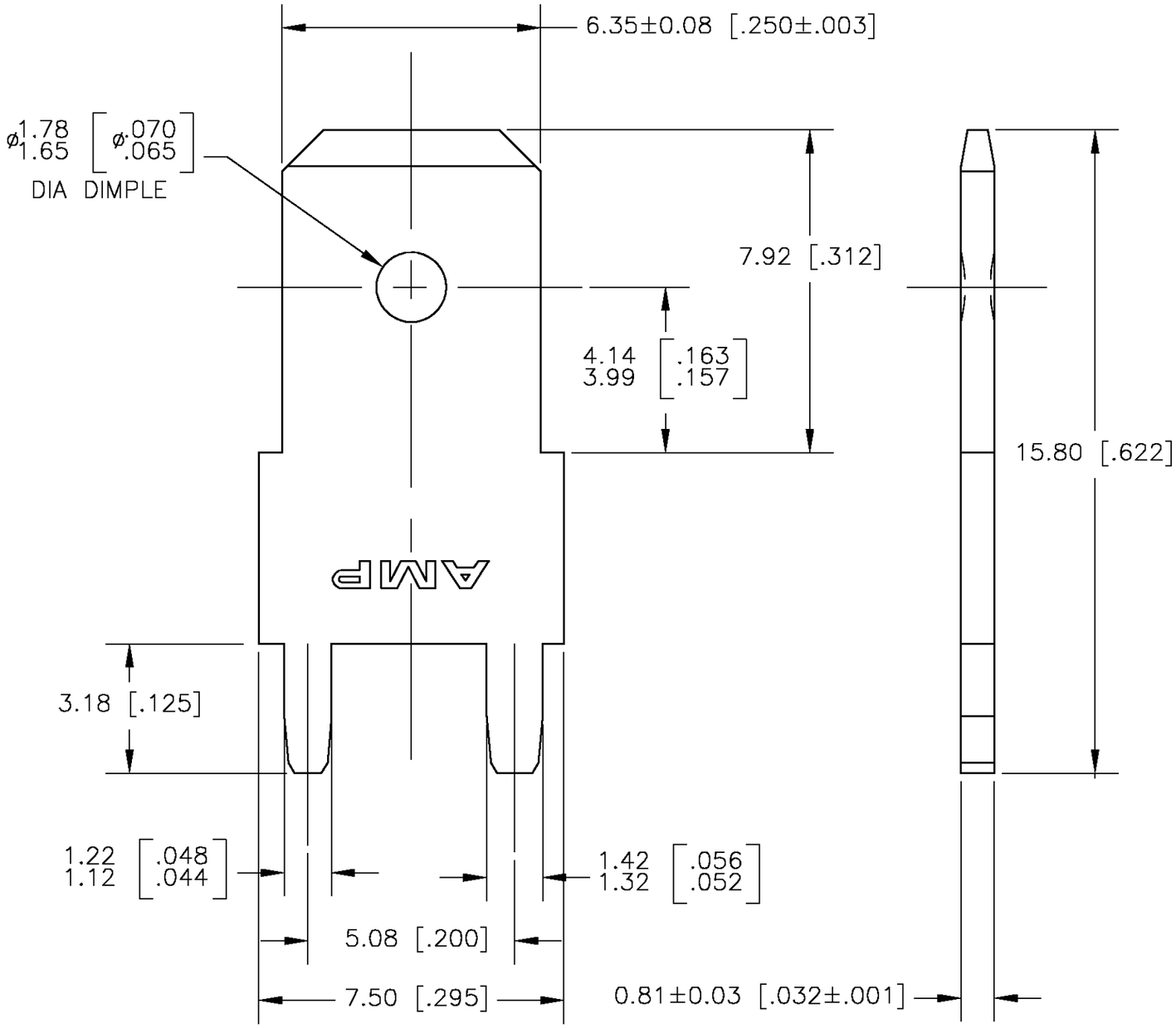

1 SUPPLIED IN LOOSE PIECE.

2 0.00381 [.000150] MIN TIN OVER 0.00254 [.000100] MIN THK COPPER.

3 0.00381 [.000150] MIN SILVER OVER 0.00254 [.000100] MIN THK COPPER.

4 SPECIAL PACKAGING QUANTITY

5 PRELIMINARY - NOT FOR PRODUCTION

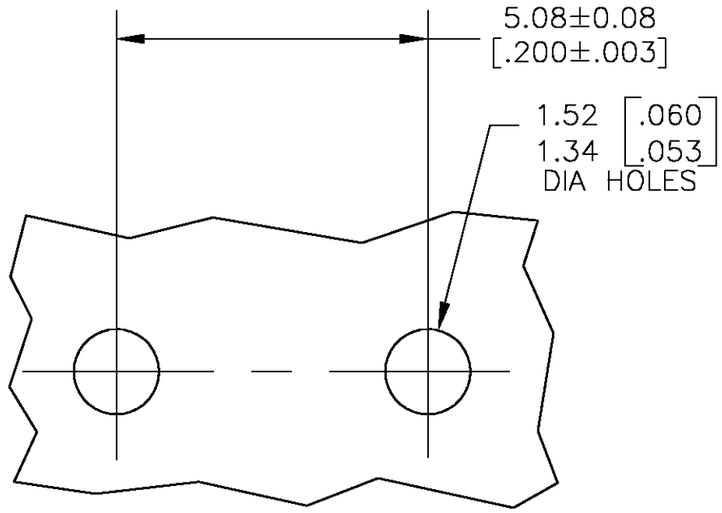

P.C.BOARD HOLES
SCALE 10:1

	FINISH	PART NUMBER
	2	4 9-62409-1 5
OBSOLETE	3	~~62409-3~~
OBSOLETE	–	~~62409-2~~
	2	62409-1

THIS DRAWING IS A CONTROLLED DOCUMENT.

DIMENSIONS: MM [INCHES]

TOLERANCES UNLESS OTHERWISE SPECIFIED:

0 PLC	± –
1 PLC	± –
2 PLC	± 0.38 [.015]
3 PLC	± –
4 PLC	± –
ANGLES	± –

MATERIAL: 082 BRASS

FINISH: SEE TABLE

DWN	JR RUTH	30NOV00
CHK	MS FEHER	30NOV00
APVD	G PORTA	30NOV00
PRODUCT SPEC	—	
APPLICATION SPEC	—	
WEIGHT	—	

CUSTOMER DRAWING

tyco Electronics
Tyco Electronics Corporation
Harrisburg, Pa 17105-3608

NAME: TAB, FASTON, PC BOARD, 6.35 [.250] SERIES

SIZE	CAGE CODE	DRAWING NO	RESTRICTED TO
A3	00779	C-62409	—

SCALE	SHEET	OF	REV
8:1	1	1	P