MICRO SWITCH
FREEPORT, ILLINOIS, U.S.A.
A DIVISION OF HONEYWELL
FED. MFG. CODE 91929

SWITCH—BASIC

CATALOG LISTING
BA-1RV111-A2
ABN1150

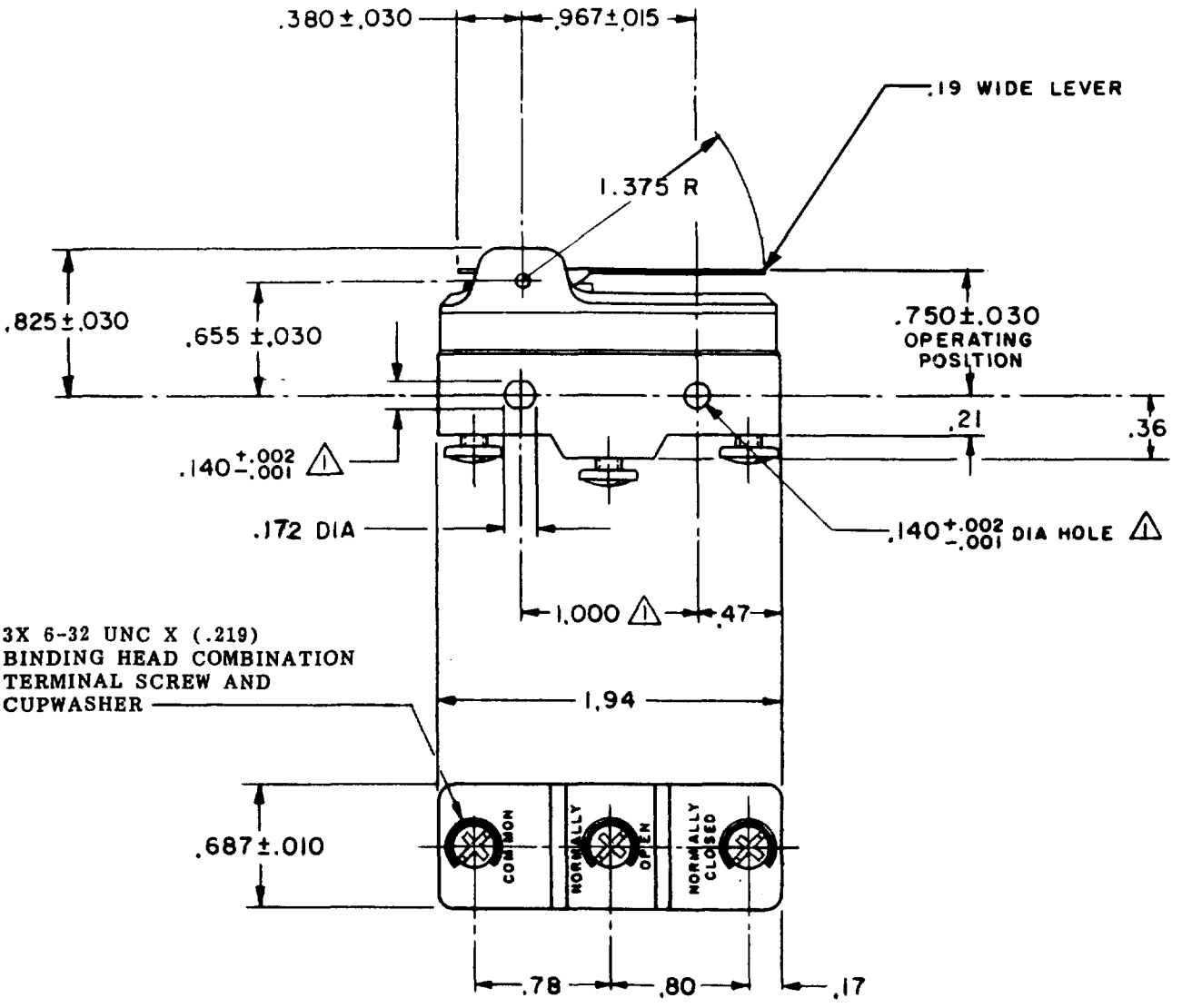

NOTE
1 – MOUNTING HOLES WILL ACCEPT PINS OR SCREWS OF .139 MAX DIA ON 1.000±.002 CENTERS

THIS DRAWING COVERS A PROPRIETARY ITEM AND IS THE PROPERTY OF MICRO SWITCH, A DIVISION OF MINNEAPOLIS-HONEYWELL REGULATOR CO. THIS DRAWING IS NOT TO BE COPIED OR USED WITHOUT THE APPROVAL OF MICRO SWITCH.

CHARACTERISTICS

OPERATING FORCE	3.5 OZ MAX
RELEASE FORCE	1 OZ MIN
PRETRAVEL	.290 MAX
A DIFFERENTIAL TRAVEL	.024 MAX
OVERTRAVEL	.062 MIN

ELECTRICAL DATA

CONTACT ARRANGEMENT
S P D T

-L33- 20 A-125, 250, OR 480 VAC
1 HP-125 VAC; 2 HP-250 VAC
0.5 A-125 VDC; 0.15 A-250 VDC

-L288-

-L308-
-L315- 20(3)A 250V ~ T85 5E4

SCALE FULL
DO NOT SCALE PRINT

UNLESS OTHERWISE NOTED
DIMENSIONS ARE IN INCHES
TOLERANCES ARE:

ONE PLACE	(.0)	±.030
TWO PLACE	(.00)	±.015
THREE PLACE	(.000)	±.005
ANGLES		±

WEIGHT

BA-1RV111-A2
PAGE 1 OF 1
DRAWING NUMBER
RELEASE NO. SR 11020
REPLACES
17 FEB 06
ISSUE 7
RJ
CHECK
15 MAY 63
BRJ
CHECK
15 MAY 63
DAW
CHECK
14 MAY 63
DRAWN MBF

REVISIONS

A	CO 18321	MBF 19 NOV 63
B	CO 19384	HBW 21 JUL 64
C	CO-73287-J	JAL 22 NOV 93
D	CO 77590	SAD 8 JUN 94
E	C093346	DLT 27 AUG 98
F	0018388	TGP 17 FEB 06

FORMTEK
FO-50378